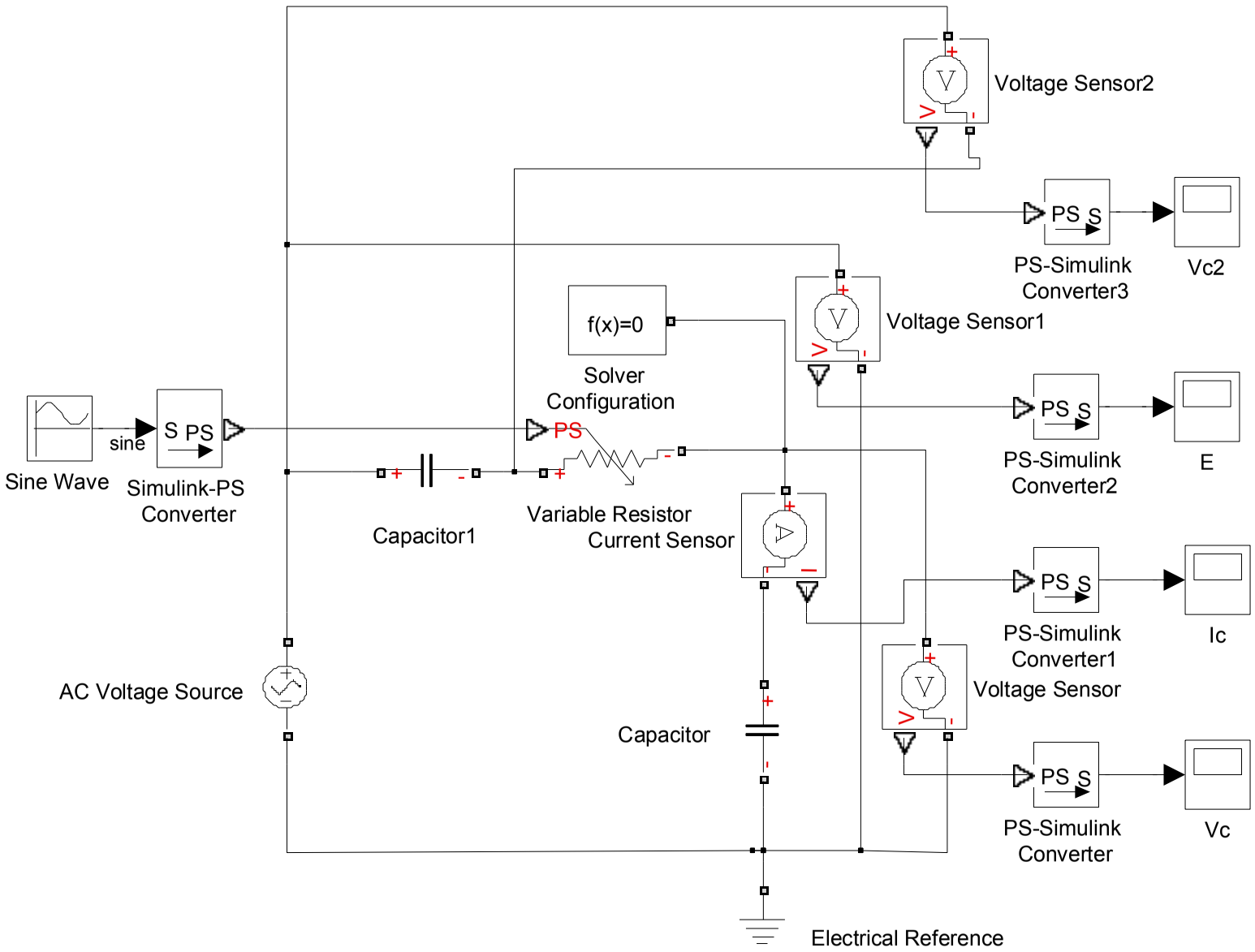
Voltage Sensor2
PS S
PS-Simulink Converter3
Vc2
f(x)=0
Solver Configuration
Voltage Sensor1
PS S
PS-Simulink Converter2
E
Sine Wave
sine
S PS
Simulink-PS Converter
PS
Capacitor1
Variable Resistor
Current Sensor
PS S
PS-Simulink Converter1
Ic
AC Voltage Source
Capacitor
Voltage Sensor
PS S
PS-Simulink Converter
Vc
Electrical Reference